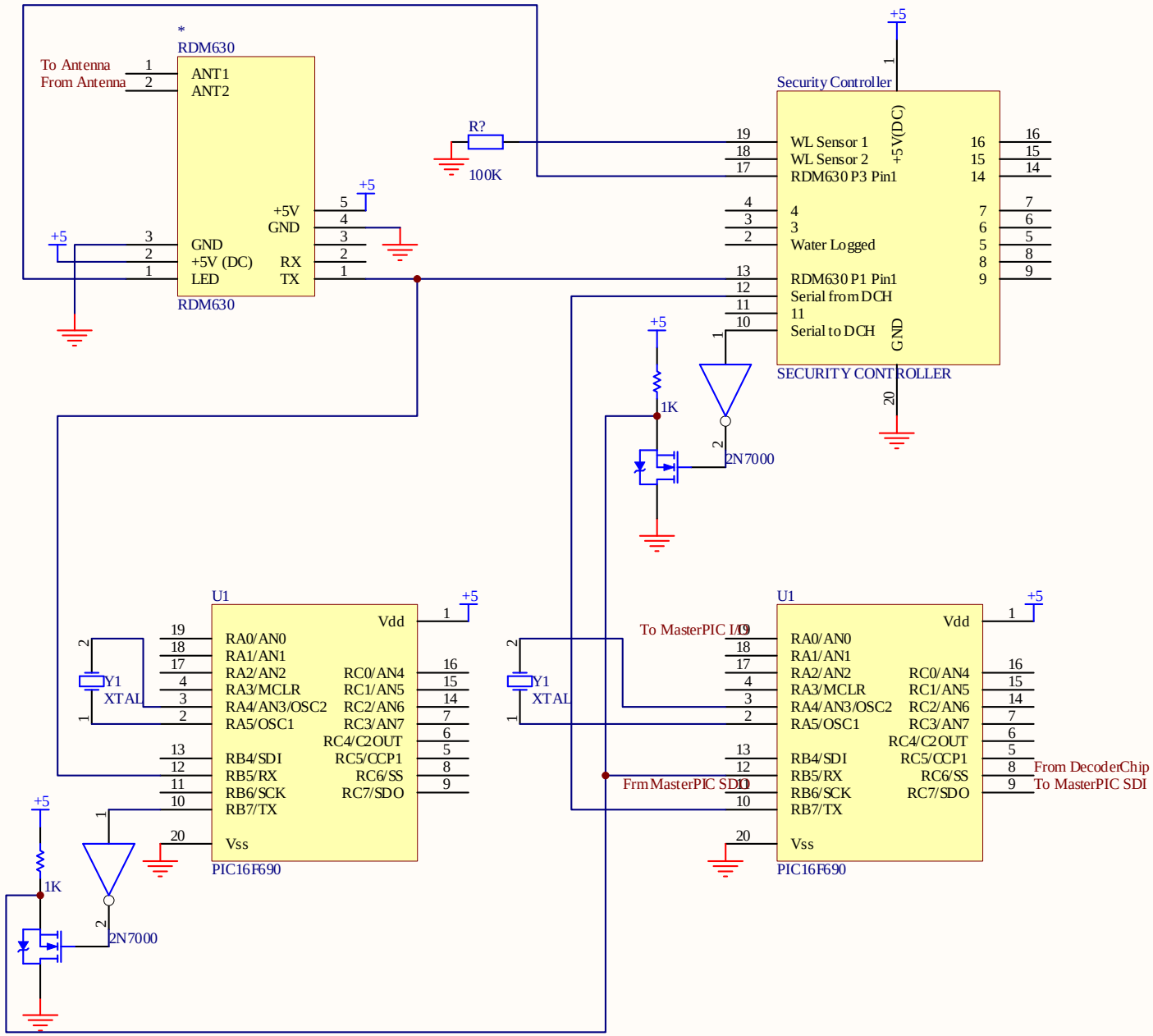

Title			Smart Product Design Lab 201 Thornton Stanford University Stanford, CA 94305-4021
Size: A	Number:	Revision:	
Date: 6/4/2010	Time: 10:01:11 AM	Sheet of	
File: U:____TeamFolders\Ship Happens\ProjectSchematics\RFIDReader_SC.SchDoc			
Drawn By: *			