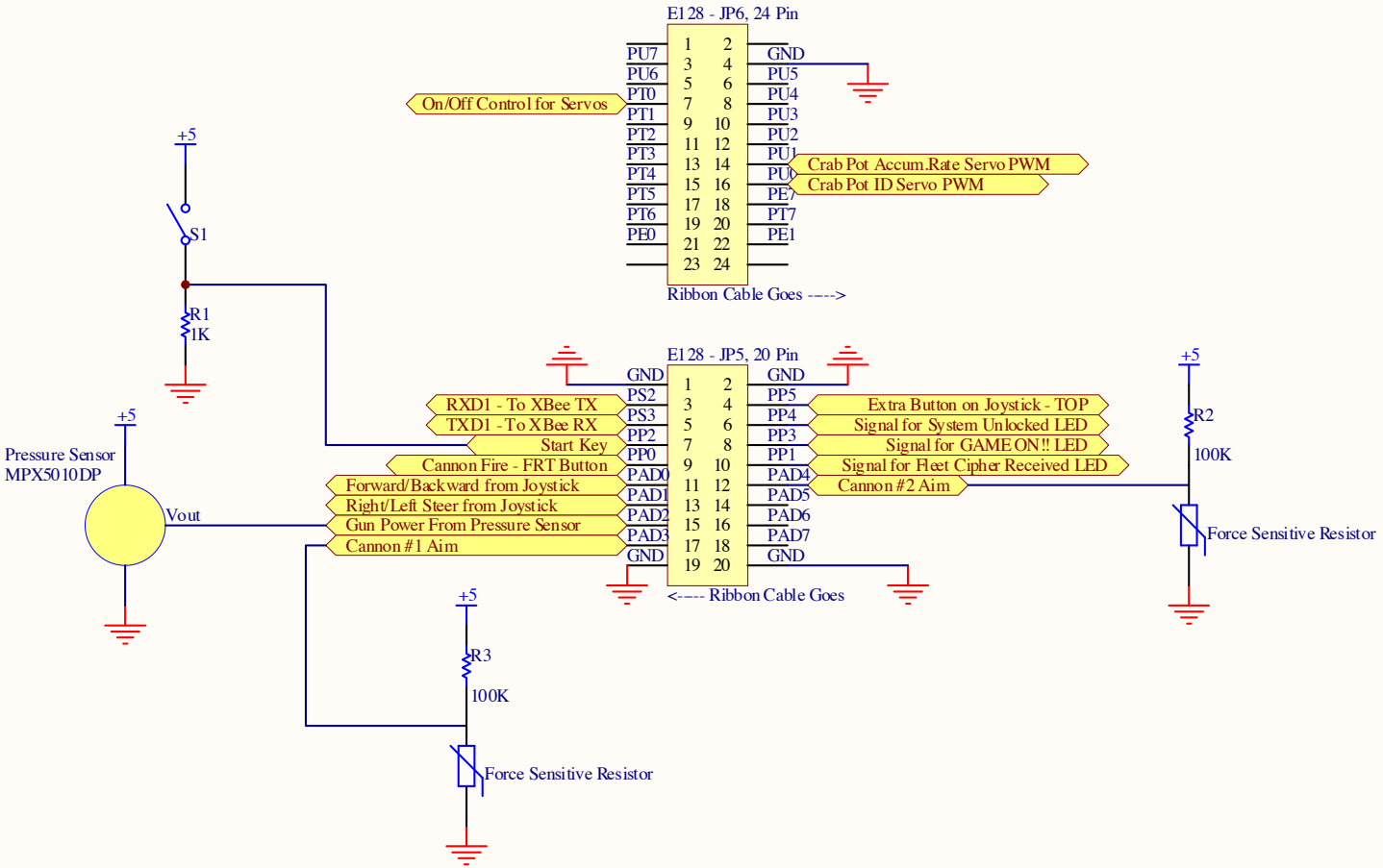
E128 - JP6, 24 Pin
PU7
PU6
PT0
PT1
PT2
PT3
PT4
PT5
PT6
PE0
GND
PU5
PU4
PU3
PU2
PU1
PU0
PE7
PT7
PE1
On/Off Control for Servos
Crab Pot Accum.Rate Servo PWM
Crab Pot ID Servo PWM
Ribbon Cable Goes ---->
+5
S1
R1
1K
E128 - JP5, 20 Pin
GND
PS2
PS3
PP2
PP0
PAD0
PAD1
PAD2
PAD3
GND
PP5
PP4
PP3
PP1
PAD4
PAD5
PAD6
PAD7
GND
RXD1 - To XBee TX
TXD1 - To XBee RX
Start Key
Cannon Fire - FRT Button
Forward/Backward from Joystick
Right/Left Steer from Joystick
Gun Power From Pressure Sensor
Cannon #1 Aim
Extra Button on Joystick - TOP
Signal for System Unlocked LED
Signal for GAME ON!! LED
Signal for Fleet Cipher Received LED
Cannon #2 Aim
<---- Ribbon Cable Goes
Pressure Sensor
MPX5010DP
Vout
R2
100K
Force Sensitive Resistor
R3
100K
Force Sensitive Resistor